www.hd-hyundaice.com

HD HYUNDAI CONSTRUCTION EQUIPMENT

Head Office(Sales Office)
11F, GLOBAL R&D CENTER, 477 BUNDANG SUSEO-RO, BUNDANG-GU, SEONGNAM-SI, GYEONGGI-DO, 13553, KOREA

PLEASE CONTACT

2024. JAN

HX210S / HX220S

Gross Power	Net Power	Bucket Capacity	Operating Weight
148 HP(110 kW) at 2,000rpm	145 HP(108 kW) at 2,000rpm	0.52 ~ 1.2m³	HX210S 20,830 kg / 45,920 lb HX220S 21,260 kg / 46,870 lb

HD HYUNDAI

WHAT'S NEWEST AND BEST

SUPERIOR PERFORMANCE

- New Variable Power Control
- Hyundai 6BTAA-5.9 (HM5.9)
- Reinforced Bucket and Bucket Linkage
- Powerful and Preciser Swing Control
- Strong and Stable Lower Frame
- Single Layer Cooling System
- Minimization of Shock and Vibration through Cab Mounting System

COMFORTABLE OPERATION

- New Front Side Air-conditioning System
- Smooth Travel Pedal and Foot Rests
- Improved Intelligent Display
- Easy-to-Reach Control Panels
- Wide Cab with Excellent Visibility
- Highly Sensitive Joystick and Easy Entrance
- Wide, Comfortable Operating Space

SERVICEABILITY AND EASY MAINTENANCE

- Easy to Maintain Engine Components
- Centralized Electric Control Box and Easy Change Air Cleaner Assembly
- Side Cover with Left & Right Swing Open Type
- Large tool box for extra storage
- Highly efficient Hydraulic Pump
- Hi-MATE (Remote Management System) Option

SUPERIOR PERFORMANCE

A new chapter in construction equipment has begun.
Making the dream a reality.

BUILT FOR MAXIMUM POWER, PERFORMANCE, RELIABILITY.

Hyundai 6BTAA-5.9(HM5.9) Engine

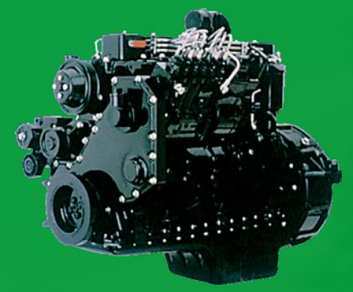

The six cylinders, turbo-charged, 4 cycle, charger air cooled engine is built for power, reliability, economy and low emissions.

Reinforced Bucket and Bucket Linkage

Sealed and adjustable bucket linkage provides less wear of pins and bushes as well as silent operation. The design includes bucket link durability and anti wear characteristics. Additional reinforcement plates on cutting edge section. Reinforced bucket is made with thicker steel and additional lateral plate.

Powerful and Preciser Swing Control

Improved shock absorbing characteristics make stopping a precise and smooth action.

"A More Reliable Way To Reach You Dream."

The Hyundai 6BTAA-5.9(HM5.9) engine has been designed with 40% fewer parts than the competition. The weight of the machine is reduced without sacrificing strength. You get a proven power plant that meets ecological concerns, without paying a premium for technology you don't need.

Strong and Stable Lower Frame

Reinforced box-section frame welded, low-stress, high-strength steel. guarantees safety and resistance against external impact when driving on rough ground and working on wet sites through high tensile strength steel panels, with highly durable upper and lower rollers and track guards.

Single Layer Cooling System

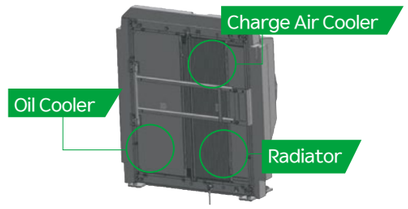

1. Improved cooling performance by changing over to 3 column type structure in a row
2. Easy to clean without disassembling anentire radiator total assembly

Minimization of Shock and Vibration through Cab Mounting System

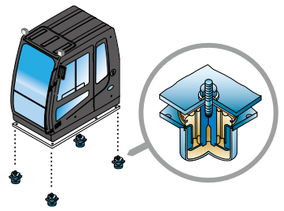

The application of Viscous Mounting to the cabin support provides the operator with a much improved ride. The operator work efficiency will increase as the shock and noise level in the cabin decreases.

COMFORTABLE OPERATION

Many electronic functions are concentrated in the most convenient spot for operators to improve work efficiency. The highly-advanced infotainment system, a product of HCE's intensive information technology development, enables both productivity and comfort while working!
The HX Series is designed with the operator in mind.

OPERATOR'S COMFORT FOREMOST. WIDE CAB EXCEEDS INDUSTRY STANDARDS.

Improved Intelligent Display

Instrument Panel is installed in front of RH console box. It is easy to check all critical systems with easy-to-read indicators.

Smooth Travel Pedal and Foot Rests

Easy-to-Reach Control Panels

Switches and other essential controls are located near the operator.
This helps keep operator movement to a minimum, enhancing control with less operator fatigue.

Wide Cab with Excellent Visibility

The cab is roomy and ergonomically designed with low noise level and good visibility. A full view front window and large rear and side windows provide excellent visibility in all directions.

Highly Sensitive Joystick and Easy Entrance

New joystick grips for precise control have been equipped with double switches.
- Left: One touch deceleration
- Right: Horn / Optional

Wide, Comfortable Operating Space

All the controls are designed and positioned according to the latest ergonomic research.
Reinforced pillars have also been added for greater cab rigidity.

SERVICEABILITY AND EASY MAINTENANCE

New Cabin for More Comfort.
Low noise, low vibration, and ergonomic design make the cabin space more comfortable and pleasant! With focus on safety and convenience of operators, the HX Series allows rapid and safe equipment inspection anytime and anywhere, providing an optimal environment for operators to work.

HiMATE Option

IT'S CONVENIENT, EASY AND VALUABLE

Hi MATE, Hyundai's newly developed remote management system, utilizes GPS-satellite technolgy to provide customers with the highest level of service and product support available.
Hi MATE enables users to remotely evaluate machine performance, access diagnostic information, and verify machine locations at the touch of a button.

WHAT IS BENEFITS

Increase Productivity

It helps you operate machines in efficient. You can check the difference between total engine hours and actual working hours. See how productive your machines are and plan any required cost saving solutions. Hi MATE offers working information such as working / idling hours, fuel consumption and rate.

Convenient and Easy Monitoring

There is nothing much to do to monitor your machines. Juts log on to the Hi MATE website or mobile application. Hi MATE allows you to watch your machines whenever and wherever you are.

Security

Protect your machines from theft or unauthorized usage with Hi MATE. If the machine moves out of the Geo-fence boundary, you will get alerts

Easy to Maintain Engine Components

The cooling system is provided for optimum operation, guaranteeing longer life for the engine and hydraulic components. Servicing of the engine and hydraulics is considerably simplified due to total accessibility.

Centralized Electric Control Box and Easy Change Air Cleaner Assembly

Electric control box and Air cleaner are centralized in one or the same compartment for easy service.

Side Cover with Left & Right Swing Open Type

Easy access to vital components gives unrestricted view of component allows easy maintenance and repair.

HX210S / HX220S

SPECIFICATIONS

ENGINE

Maker / Model			Hyundai 6BTAA-5.9 (HM5.9)
Type			Water cooled, 4 cycle Diesel, 6-Cylinders in line, direct injection, Turbocharged, charge air cooled, Low emission
Rated Flywheel Horse Power	SAE	J1995 (gross)	148 HP (110 kW) at 2,000 rpm
		J1349 (net)	145 HP (108 kW) at 2,000 rpm
	DIN	6271/1 (gross)	150 PS (110 kW) at 2,000 rpm
		6271/1 (net)	147 PS (108 kW) at 2,000 rpm
Max. Torque			64 kgf · m (463 lbf · ft) at 1,300 rpm
Bore X Stroke			102 X 120 mm (4" X 4.7")
Piston Displacement			5,900 cc (360 in³)
Batteries			2 X 12 V X 100 Ah
Starting Motor			24 V, 4.5 kW
Alternator			24 V, 70 Amp

HYDRAULIC SYSTEM

MAIN PUMP

Type	Variable displacement tandem-axis piston pumps
Max. Flow	2 X 234 ℓ/min (61.8 US gpm / 51.4 UK gpm)
Sub-Pump for Pilot Circuit	Gear pump

Cross-sensing and fuel saving pump system

HYDRAULIC MOTORS

Travel	Two speed axial pistons motor with brake valve and parking brake
Swing	Axial piston motor with automatic brake

RELIEF VALVE SETTING

Implement Circuits	350 kgf/cm² (4,978 psi)
Travel	350 kgf/cm² (4,978 psi)
Swing Circuit	265 kgf/cm² (3,769 psi)
Pilot Circuit	40 kgf/cm² (568 psi)
Service Valve	Installed

HYDRAULIC CYLINDERS

No. of Cylinder Bore X Stroke	Boom: 2-120 X 1,290 mm (4.7" X 50.8")
	Arm: 1-140 X 1,443 mm (5.5" X 59.4")
	Bucket: 1-120 X 1,060 mm (4.72" X 41.5")

DRIVES & BRAKES

Drive Method	Fully hydrostatic type
Drive Motor	Axial piston motor, in-shoe design
Reduction System	Planetary reduction gear
Max. Drawbar Pull	21,100 kgf (46,500 lbf)
Max. Travel Speed (high / low)	5.7 km/hr (3.54 mph) / 3.5 km/hr (2.17 mph)
Gradeability	35° (70 %)
Parking Brake	Multi wet disc

CONTROL

Pilot pressure operated joysticks and pedals with detachable lever provide almost effortless and fatigueless operation.

Pilot Control	Two joysticks with one safety lever (LH): Swing and arm, (RH): Boom and bucket (ISO)
Traveling and Steering	Two levers with pedals
Engine Throttle	Electric, Dial type
Lights	One light mounted on the boom and one in the battery box

SWING SYSTEM

Swing Motor	Fixed displacement axial pistons motor
Swing Reduction	Planetary gear reduction
Swing Bearing lubrication	Grease-bathed
Swing Brake	Multi wet disc
Swing Speed	12.2 rpm

SERVICE CAPACITIES

	liter	US gal	UK gal
Fuel Tank	340	89.8	74.8
Engine Coolant	20	5.3	4.4
Engine Oil	20	5.3	4.4
Swing Device	6.2	1.3	1.1
Final Drive (Each)	4.5	1.6	1.3
Hydraulic System (Including Tank)	275	72.6	60.5
Hydraulic Tank	160	42.3	35.2

*( ):option

UNDERCARRIAGE

The X-leg type center frame is integrally welded with reinforced box-section track frames. The undercarriage includes lubricated rollers, idlers, track adjusters with shock absorbing springs and sprockets, and a track chain with double or triple grouser shoes.

Model	HX210S	HX220S
Center Frame	X-leg type	X-leg type
Track Frame	Pentagonal box type	Pentagonal box type
No. of Shoes on Each Side	46 EA	49 EA
No. of Carrier Rollers on Each Side	2 EA	2 EA
No. of Track Rollers on Each Side	7 EA	8 EA
No. of Rail Guards on Each Side	1 EA	2 EA

OPERATING WEIGHT (APPROXIMATE)

Operating weight, including 5,700 mm (18' 8") boom, 2,900 mm (9' 6") arm, SAE heaped 0.92m³ (1.20 yd³) bucket, lubricant, coolant, full fuel tank, full hydraulic tank, and all standard equipments.

MAJOR COMPONENT WEIGHT

Upperstructure	5,600 kg (12,350 lb)
Counterweight	3,600 kg (7,937 lb)
Boom (with Arm Cylinder)	1,950 kg (4,300 lb)

OPERATING WEIGHT

Shoes		Operating Weight		Ground Pressure
Type	Width mm (in)	kg (lb)		kgf/cm² (psi)
Triple Grouser	600 (24")	HX210S	20,830 (45,920)	0.48 (6.81)
		HX220S	21,260 (46,870)	0.45 (6.45)
	700 (28")	HX220S	21,750 (47,950)	0.40 (5.66)
	800 (32")	HX210S	21,380 (47,140)	0.42 (5.99)
		HX220S	22,040 (48,590)	0.35 (5.02)
		HX220S LR	24,390 (53,770)	0.39 (5.55)

HX210S / HX220S

BUCKET SELECTION GUIDE & DIGGING FORCE

BUCKETS

All buckets are welded with high-strength steel.

SAE heaped m³ (yd³)

⊙ 0.92 (1.20)

⊙ 1.05 (1.37)
⊙ 1.17 (1.53)

◈ 0.92 (1.20)
◈ 1.08 (1.41)

◆ 0.91 (1.19)
◆ 1.23 (1.61)
◆ 0.87 (1.14)
◆ 1.20 (1.57)

★ 0.51 (0.67)

Capacity m³ (yd³)			Width mm (in)		Weight kg (lb)	Tooth EA	Recommendation mm (ft-in)						
							5,700 (18' 8") Boom	5,700 (18' 8") Boom	5,700 (18' 8") Boom	5,680 (18' 8") Boom	5,680 (18' 8") Boom	5,680 (18' 8") Boom	8,500 (27' 11") Boom
							3.6 ton CWT			4.2 ton CWT			5.3 ton CWT
Type	SAE heaped	CECE heaped	Without Side Cutters	With Side Cutters			2,000 (6' 7") Arm	2,400 (7' 10") Arm	2,900 (9' 6") Arm	2,000 (6' 7") Arm	2,400 (7' 10") Arm	2,900 (9' 6") Arm	6,200 (20' 4") Arm
HX210S	⊙ 0.92 (1.20)	0.81 (1.06)	1,085 (42.7")	1,230 (48.4")	750 (1,650)	5	●	◐	■	●	●	◐	-
	⊙ 1.05 (1.37)	0.96 (1.26)	1,220 (48.0")	1,370 (53.9")	790 (1,740)	5	◐	■	▲	◐	◐	■	-
	⊙ 1.17 (1.53)	1.00 (1.31)	1,340 (52.8")	1,490 (58.7")	850 (1,870)	6	■	▲	▲	◐	■	▲	-
	◈ 0.92 (1.20)	0.83 (1.09)	1,050 (41.3")	1,095 (43.1")	865 (1,910)	5	●	◐	■	●	◐	◐	-
	◈ 1.08 (1.41)	0.97 (1.27)	1,200 (47.2")	1,245 (49.0")	935 (2,060)	5	■	■	▲	◐	■	■	-
	◆ 0.91 (1.19)	0.83 (1.09)	1,050 (41.3")	1,095 (43.1")	1,050 (2,310)	4	◐	■	■	●	◐	■	-
	◆ 1.23 (1.61)	1.11 (1.45)	1,350 (53.1")	1,395 (54.9")	1,240 (2,730)	5	▲	▲	-	■	▲	▲	-
	◆ 0.87 (1.14)	0.75 (0.98)	1,150 (45.3")	-	875 (1,930)	5	●	◐	■	●	●	◐	-
	◆ 1.20 (1.57)	1.00 (1.31)	1,425 (56.1")	-	990 (2,180)	5	■	▲	▲	■	■	▲	-
HX220S	⊙ 0.92 (1.20)	0.81 (1.06)	1,085 (42.7")	1,230 (48.4")	750 (1,650)	5	●	●	◐	●	●	●	-
	⊙ 1.05 (1.37)	0.96 (1.26)	1,220 (48.0")	1,370 (53.9")	790 (1,740)	5	●	◐	■	●	●	◐	-
	⊙ 1.17 (1.53)	1.00 (1.31)	1,340 (52.8")	1,490 (58.7")	850 (1,870)	6	◐	■	■	●	◐	■	-
	◈ 0.92 (1.20)	0.83 (1.09)	1,050 (41.3")	1,095 (43.1")	865 (1,910)	5	●	●	◐	●	●	●	-
	◈ 1.08 (1.41)	0.97 (1.27)	1,200 (47.2")	1,245 (49.0")	935 (2,060)	5	◐	◐	■	●	◐	◐	-
	◆ 0.91 (1.19)	0.83 (1.09)	1,050 (41.3")	1,095 (43.1")	1,050 (2,310)	4	●	◐	◐	●	●	◐	-
	◆ 1.23 (1.61)	1.11 (1.45)	1,350 (53.1")	1,395 (54.9")	1,240 (2,730)	5	■	▲	▲	◐	■	▲	-
	◆ 0.87 (1.14)	0.75 (0.98)	1,150 (45.3")	-	875 (1,930)	5	●	●	◐	●	●	●	-
	◆ 1.20 (1.57)	1.00 (1.31)	1,425 (56.1")	-	990 (2,180)	5	■	■	▲	◐	■	■	-
	★ 0.51 (0.67)	0.45 (0.59)	1,865 (34.1")	995 (39.2")	395 (0,870	5	-	-	-	-	-	-	■

⊙ General Purpose
◈ Heavy duty bucket
◆ Rock-Heavy duty bucket
★ Long reach bucket

● : Applicable for materials with density of 2,100 kg/m³ (3,500 lb/yd³) or less
◐ : Applicable for materials with density of 1,800 kg/m³ (3,000 lb/yd³) or less
■ : Applicable for materials with density of 1,500 kg/m³ (2,500 lb/yd³) or less
▲ : Applicable for materials with density of 1,200 kg/m³ (2,000 lb/yd³) or less
- : Not Recommended

ATTACHMENT

5.70 m (18' 8''), 8.50 m (27' 11'') Booms and 2.0 m (6' 7''), 2.4m (7' 10''), 2.9 m (9' 6''), 6.2 m (20' 4'') Arms are available.

DIGGING FORCE

Boom	Length	mm (ft.in)	5,700 (18' 8")			8,500 (27' 11")
	Weight	kg (lb)	1,865 (4,110)			2,380 (5,250)
Arm	Length	mm (ft.in)	2,000 (6' 7")	2,400 (7' 10")	2,900 (9' 6")	6,200 (20' 4")
	Weight	kg (lb)	820 (1,810)	900 (1,980)	985 (2,170)	1,295 (2,850)
Bucket Digging Force	SAE	kN	130.4 [141.6]	130.4 [141.6]	130.4 [141.6]	68.0 [73.7]
		kgf	13,300 [14,440]	13,300 [14,440]	13,300 [14,440]	6,930 [7,520]
		lbf	29,320 [31,830]	29,320 [31,830]	29,320 [31,830]	15,280 [16,580]
	ISO	kN	152.3 [165.3]	152.3 [165.3]	152.3 [165.3]	80.3 [87.2]
		kgf	15,530 [16,860]	15,530 [16,860]	15,530 [16,860]	8,190 [8,890]
		lbf	34,240 [37,170]	34,240 [37,170]	34,240 [37,170]	18,060 [19,600]
Arm Crowd Force	SAE	kN	144.3 [156.6]	119.3 [129.4]	102.8 [111.6]	49.5 [53.7]
		kgf	14,710 [15,970]	12,160 [13,200]	10,480 [11,380]	5,050 [5,480]
		lbf	32,430 [35,210]	26,810 [29,100]	23,100 [25,090]	11,130 [12,080]
	ISO	kN	152.0 [165.0]	124.7 [135.4]	106.9 [116.0]	50.5 [54.8]
		kgf	15,500 [16,830]	12,720 [13,810]	10,900 [11,830]	5,150 [5,590]
		lbf	34,170 [37,100]	28,040 [30,450]	24,030 [26,080]	11,350 [12,320]

Note: Boom weight includes arm cylinder, piping, and pin
Arm weight includes bucket cylinder, linkage, and pin

HX210S / HX220S

DIMENSIONS & WORKING RANGE

HX210S/HX220S DIMENSIONS

5.70 m (18' 8") Boom and 2.0 m (6' 7"), 2.4 m (7' 10"), 2.9 m (9' 6") Arm

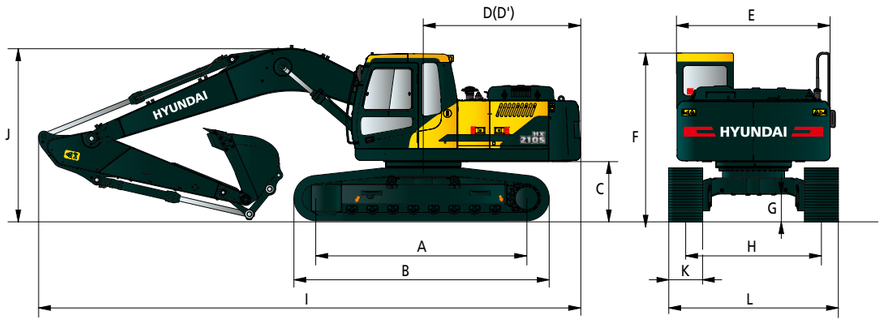

Unit : mm (ft · in)

	Model	HX210S	HX220S
A	Tumbler Distance	3,270 (10' 9")	3,650 (12' 0")
*B	Overall Length of Crawler	4,066 (13' 4")	4,443 (14' 5")
C	Ground Clearance of Counterweight	1,095 (3' 7")	1,095 (3' 7")
D	Tail Swing Radius	2,845 (9' 4")	2,845 (9' 4")
D'	Rear-end Length	2,770 (9' 1")	2,770 (9' 1")
E	Overall Width of Upperstructure	2,700 (8' 10")	2,700 (8' 10")
F	Overall Height of Cab	3,035 (9' 11")	3,035 (9' 11")
G	Min. Ground Clearance	475 (1' 7")	475 (1' 7")
H	Track Gauge	2,200 (7' 3")	2,390 (7' 10")

	Boom length		5,700 (18' 8")		
	Arm length		2,000 (6' 7")	2,400 (7' 10")	2,900 (9' 6")
I	Overall Length		9,620 (31' 7")	9,575 (31' 5")	9,550 (31' 4")
J	Overall Height of Boom		3,115 (10' 3")	3,020 (9' 11")	2,960 (9' 9")
HX210S					
K	Track Shoe Width	Type	Triple Grouser		
		Width	600 (24")	800 (32")	
L	Overall Width		2,800 (9' 2")	3,000 (9' 10")	
HX220S					
K	Track Shoe Width	Type	Triple Grouser		
		Width	600 (24")	700 (28")	800 (32")
L	Overall Width		2,990 (9' 10")	3,090 (10' 2")	3,190 (10' 6")

HX220S LONG REACH DIMENSIONS

8.50 m (27' 11") boom, 6.2 m (20' 4") arm

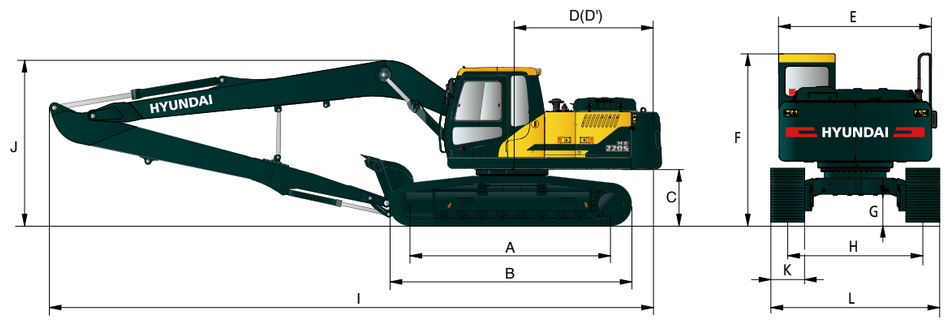

Unit : mm (ft · in)

A	Tumbler Distance	3,650 (12' 0")
*B	Overall Length of Crawler	4,443 (14' 7")
C	Ground Clearance of Counterweight	1,095 (3' 7")
D	Tail Swing Radius	2,890 (9' 6")
D'	Rear-end Length	2,770 (9' 1")
E	Overall Width of Upperstructure	2,740 (9' 0")
F	Overall Height of Cab	3,035 (9' 11")
G	Min. Ground Clearance	475 (1' 7")
H	Track Gauge	2,390 (7' 10")

	Boom Length	8,500 (27' 11")
	Arm Length	6,200 (20' 4")
I	Overall Length	12,345 (40' 6")
J	Overall Height of Boom	3,365 (11' 0")
K	Track Shoe Width	800 (32")
L	Overall Width	3,190 (10' 6")

HX210S/HX220S WORKING RANGE

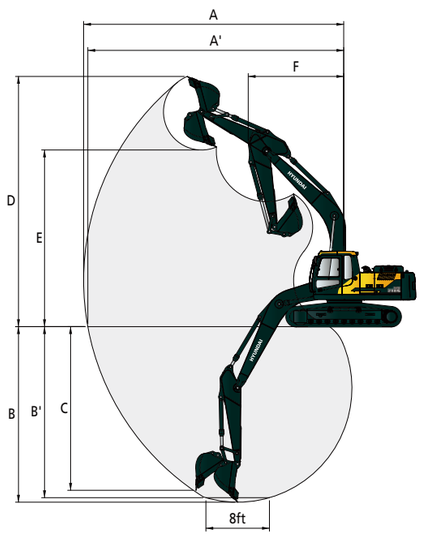

Unit : mm (ft · in)

	Model	HX210S/220S		
	Boom Length	5,700 (18' 8")		
	Arm Length	2,000 (6' 7")	2,400 (7' 10")	2,900 (9' 6")
A	Max. Digging Reach	9,145 (30' 0")	9,525 (31' 3")	9,945 (32' 8")
A'	Max. Digging Reach on Ground	8,960 (29' 5")	9,355 (30' 8")	9,780 (32' 1")
B	Max. Digging Depth	5,585 (18' 4")	5,990 (19' 8")	6,500 (21' 4")
B'	Max. Digging Depth (8' Level)	5,360 (17' 7")	5,790 (19' 0")	6,315 (20' 9")
C	Max. Vertical Wall Digging Depth	5,070 (16' 8")	5,445 (17' 10")	5,960 (19' 7")
D	Max. Digging Height	9,370 (30' 9")	9,625 (31' 7")	9,750 (32' 0")
E	Max. Dumping Height	6,580 (21' 7")	6,830 (22' 5")	6,990 (22' 11")
F	Min. Swing Radius	3,715 (12' 2")	3,400 (11' 2")	3,425 (11' 3")

HX220S LONG REACH WORKING RANGE

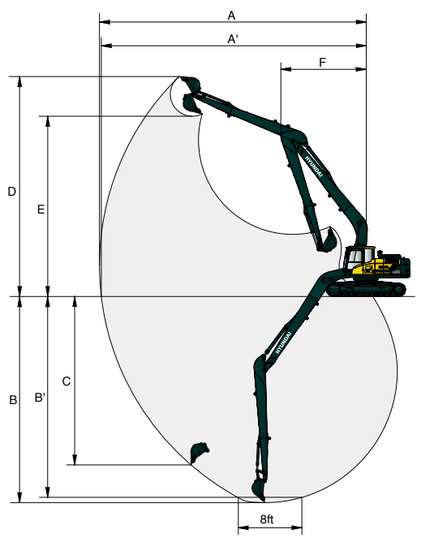

Unit : mm (ft · in)

	Boom Length	8,500 (27' 11")
	Arm Length	6,200 (20' 4")
A	Max. Digging Reach	15,425 (50' 7")
A'	Max. Digging Reach on Ground	15,320 (50' 3")
B	Max. Digging Depth	11,500 (37' 9")
B'	Max. Digging Depth (8' Level)	11,355 (37' 3")
C	Max. Vertical Wall Digging Depth	10,265 (33' 8")
D	Max. Digging Height	13,445 (44' 1")
E	Max. Dumping Height	11,200 (36' 9")
F	Min. Swing Radius	4,705 (15' 5")

HX210S / HX220S

LIFTING CAPACITY

Rating over-front | Rating over-side or 360 degree

HX210S MONO BOOM

5.70 m (18' 8") boom, 2.00 m (6' 7") arm equipped with 600 mm (24") triple grouser shoe and 3,600 kg counter weight

Load Point Height m (ft)		Lift-Point Radius								At Max. Reach		
		3.0m (9.8ft)		4.5m (14.8ft)		6.0m (19.7ft)		7.5m (24.6ft)		Capacity		Reach
												m (ft)
7.5m	kg									*6,130	5,770	5.05
24.6ft	lb									*13,510	12,720	(16.6)
6.0m	kg			*6,180	*6,180	*5,780	4,360			*5,810	3,910	6.39
19.7ft	lb			*13,620	*13,620	*12,740	9,610			*12,810	8,620	(21.0)
4.5m	kg			*7,370	6,540	*6,130	4,240			4,890	3,190	7.17
14.8ft	lb			*16,250	14,420	*13,510	9,350			10,780	7,030	(23.5)
3.0m	kg					6,300	4,030	4,490	2,900	4,410	2,850	7.58
9.8ft	lb					13,890	8,880	9,900	6,390	9,720	6,280	(24.9)
1.5m	kg					6,090	3,840	4,410	2,830	4,260	2,740	7.67
4.9ft	lb					13,430	8,470	9,720	6,240	9,390	6,040	(25.2)
0.0m	kg			9,270	5,530	5,970	3,730			4,400	2,810	7.46
0.0ft	lb			20,440	12,190	13,160	8,220			9,700	6,190	(24.5)
-1.5m	kg			9,290	5,550	5,960	3,720			4,900	3,110	6.92
-4.9ft	lb			20,480	12,240	13,140	8,200			10,800	6,860	(22.7)
-3.0m	kg	*11,600	10,880	*8,810	5,680					6,180	3,900	5.95
-9.8ft	lb	*25,570	23,990	*19,420	12,520					13,620	8,600	(19.5)

5.70 m (18' 8") boom, 2.40 m (7' 10") arm equipped with 600 mm (24") triple grouser shoe and 3,600 kg counter weight

Load Point Height m (ft)		Lift-Point Radius								At Max. Reach		
		3.0m (9.8ft)		4.5m (14.8ft)		6.0m (19.7ft)		7.5m (24.6ft)		Capacity		Reach
												m (ft)
7.5m	kg									*5,580	4,880	5.62
24.6ft	lb									*12,300	10,760	(18.4)
6.0m	kg					*5,340	4,410			5,360	3,510	6.85
19.7ft	lb					*11,770	9,720			11,820	7,740	(22.5)
4.5m	kg			*6,830	6,630	*5,770	4,260	4,570	2,970	4,480	2,910	7.58
14.8ft	lb			*15,060	14,620	*12,720	9,390	10,080	6,550	9,880	6,420	(24.9)
3.0m	kg			*8,560	6,090	6,320	4,040	4,480	2,890	4,070	2,620	7.97
9.8ft	lb			*18,870	13,430	13,930	8,910	9,880	6,370	8,970	5,780	(26.1)
1.5m	kg			9,440	5,660	6,080	3,830	4,380	2,800	3,940	2,520	8.06
4.9ft	lb			20,810	12,480	13,400	8,440	9,660	6,170	8,690	5,560	(26.4)
0.0m	kg			9,220	5,480	5,930	3,690	4,310	2,730	4,040	2,570	7.85
0.0ft	lb			20,330	12,080	13,070	8,140	9,500	6,020	8,910	5,670	(25.8)
-1.5m	kg	*9,280	*9,280	9,200	5,460	5,890	3,660			4,450	2,820	7.34
-4.9ft	lb	*20,460	*20,460	20,280	12,040	12,990	8,070			9,810	6,220	(24.1)
-3.0m	kg	*12,580	10,660	*9,230	5,560	5,970	3,730			5,430	3,420	6.44
-9.8ft	lb	*27,730	23,500	*20,350	12,260	13,160	8,220			11,970	7,540	(21.1)
-4.5m	kg			*6,610	5,840							
-14.8ft	lb			*14,570	12,870							

5.70 m (18' 8") boom, 2.90 m (9' 6") arm equipped with 600 mm (24") triple grouser shoe and 3,600 kg counter weight

Load Point Height m (ft)		Lift-Point Radius										At Max. Reach		
		1.5m (4.9ft)		3.0m (9.8ft)		4.5m (14.8ft)		6.0m (19.7ft)		7.5m (24.6ft)		Capacity		Reach
														m (ft)
7.5m	kg							*4,920	4,480			*4,330	4,200	6.21
24.6ft	lb							*10,850	9,880			*9,550	9,260	(20.4)
6.0m	kg							*4,830	4,470			*4,030	3,150	7.34
19.7ft	lb							*10,650	9,850			*8,880	6,940	(24.1)
4.5m	kg					*6,130	*6,130	*5,330	4,310	4,600	3,000	*3,960	2,650	8.03
14.8ft	lb					*13,510	*13,510	*11,750	9,500	10,140	6,610	*8,730	5,840	(26.3)
3.0m	kg					*7,880	6,210	*6,120	4,070	4,490	2,890	3,750	2,400	8.39
9.8ft	lb					*17,370	13,690	*13,490	8,970	9,900	6,370	8,270	5,290	(27.5)
1.5m	kg					*9,500	5,710	6,090	3,830	4,360	2,780	3,630	2,310	8.48
4.9ft	lb					*20,940	12,590	13,430	8,440	9,610	6,130	8,000	5,090	(27.8)
0.0m	kg			*4,930	*4,930	9,190	5,440	5,900	3,660	4,270	2,690	3,700	2,340	8.28
0.0ft	lb			*10,870	*10,870	20,260	11,990	13,010	8,070	9,410	5,930	8,160	5,160	(27.2)
-1.5m	kg	*5,620	*5,620	*9,410	*9,410	9,110	5,370	5,820	3,590	4,240	2,660	4,020	2,530	7.80
-4.9ft	lb	*12,390	*12,390	*20,750	*20,750	20,080	11,840	12,830	7,910	9,350	5,860	8,860	5,580	(25.6)
-3.0m	kg			*13,620	10,420	9,180	5,430	5,860	3,620			4,770	3,000	6.96
-9.8ft	lb			*30,030	22,970	20,240	11,970	12,920	7,980			10,520	6,610	(22.8)
-4.5m	kg			*10,720	*10,720	*7,730	5,640					*5,820	4,180	5.60
-14.8ft	lb			*23,630	*23,630	*17,040	12,430					*12,830	9,220	(18.4)

| 1 | Lifting capacity are based on ISO 10567.
| 2 | Lifting capacity of HX Series does not exceed 75% of tipping load with the machine on firm, level ground or 87% of full hydraulic capacity.
| 3 | The Lift-point is bucket pivot mounting pin on the arm(without bucket mass).
| 4 | (*) indicates load limited by hydraulic capacity.

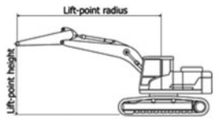

Rating over-front | Rating over-side or 360 degree

HX220S MONO BOOM

5.70 m (18' 8") boom, 2.00 m (6' 7") arm equipped with 600 mm (24") triple grouser shoe and 3,600 kg counter weight

Load Point Height m (ft)		Lift-Point Radius								At Max. Reach		
		3.0m (9.8ft)		4.5m (14.8ft)		6.0m (19.7ft)		7.5m (24.6ft)		Capacity		Reach
												m (ft)
7.5m	kg									*6,130	*6,130	5.05
24.6ft	lb									*13,510	*13,510	(16.6)
6.0m	kg			*6,170	*6,170	*5,780	4,850			*5,810	4,360	6.39
19.7ft	lb			*13,600	*13,600	*12,740	10,690			*12,810	9,610	(21.0)
4.5m	kg			*7,370	7,320	*6,130	4,720			5,510	3,560	7.17
14.8ft	lb			*16,250	16,140	*13,510	10,410			12,150	7,850	(23.5)
3.0m	kg					*6,820	4,510	5,060	3,250	4,970	3,190	7.58
9.8ft	lb					*15,040	9,940	11,160	7,170	10,960	7,030	(24.9)
1.5m	kg					6,910	4,320	4,970	3,170	4,810	3,070	7.67
4.9ft	lb					15,230	9,520	10,960	6,990	10,600	6,770	(25.2)
0.0m	kg			*10,600	6,270	6,790	4,210			4,970	3,150	7.46
0.0ft	lb			*23,370	13,820	14,970	9,280			10,960	6,940	(24.5)
-1.5m	kg			*10,130	6,290	6,780	4,200			5,540	3,500	6.92
-4.9ft	lb			*22,330	13,870	14,950	9,260			12,210	7,720	(22.7)
-3.0m	kg	*11,600	*11,600	*8,810	6,430					*6,360	4,380	5.95
-9.8ft	lb	*25,570	*25,570	*19,420	14,180					*14,020	9,660	(19.5)

5.70 m (18' 8") boom, 2.40 m (7' 10") arm equipped with 600 mm (24") triple grouser shoe and 3,600 kg counter weight

Load Point Height m (ft)		Lift-Point Radius								At Max. Reach		
		3.0m (9.8ft)		4.5m (14.8ft)		6.0m (19.7ft)		7.5m (24.6ft)		Capacity		Reach
												m (ft)
7.5m	kg									*5,580	5,430	5.62
24.6ft	lb									*12,300	11,970	(18.4)
6.0m	kg					*5,340	4,900			*5,390	3,910	6.85
19.7ft	lb					*11,770	10,800			*11,880	8,620	(22.5)
4.5m	kg			*6,820	*6,820	*5,770	4,750	5,140	3,320	5,040	3,250	7.58
14.8ft	lb			*15,040	*15,040	*12,720	10,470	11,330	7,320	11,110	7,170	(24.9)
3.0m	kg			*8,560	6,860	*6,520	4,520	5,050	3,240	4,590	2,940	7.97
9.8ft	lb			*18,870	15,120	*14,370	9,960	11,130	7,140	10,120	6,480	(26.1)
1.5m	kg			*9,990	6,420	6,910	4,300	4,950	3,140	4,450	2,830	8.06
4.9ft	lb			*22,020	14,150	15,230	9,480	10,910	6,920	9,810	6,240	(26.4)
0.0m	kg			*10,530	6,220	6,750	4,170	4,870	3,080	4,570	2,890	7.85
0.0ft	lb			*23,210	13,710	14,880	9,190	10,740	6,790	10,080	6,370	(25.8)
-1.5m	kg	*9,270	*9,270	*10,280	6,200	6,710	4,130			5,030	3,170	7.34
-4.9ft	lb	*20,440	*20,440	*22,660	13,670	14,790	9,110			11,090	6,990	(24.1)
-3.0m	kg	*12,590	12,350	*9,230	6,310	*6,790	4,210			*6,060	3,850	6.44
-9.8ft	lb	*27,760	27,230	*20,350	13,910	*14,970	9,280			*13,360	8,490	(21.1)
-4.5m	kg			*6,620	6,600							
-14.8ft	lb			*14,590	14,550							

5.70 m (18' 8") boom, 2.90 m (9' 6") arm equipped with 600 mm (24") triple grouser shoe and 3,600 kg counter weight

Load Point Height m (ft)		Lift-Point Radius										At Max. Reach		
		1.5m (4.9ft)		3.0m (9.8ft)		4.5m (14.8ft)		6.0m (19.7ft)		7.5m (24.6ft)		Capacity		Reach
														m (ft)
7.5m	kg							*4,920	*4,920			*4,330	*4,330	6.21
24.6ft	lb							*10,850	*10,850			*9,550	*9,550	(20.4)
6.0m	kg							*4,830	*4,830			*4,030	3,510	7.34
19.7ft	lb							*10,650	*10,650			*8,880	7,740	(24.1)
4.5m	kg					*6,130	*6,130	*5,330	4,800	*4,960	3,350	*3,960	2,970	8.03
14.8ft	lb					*13,510	*13,510	*11,750	10,580	*10,930	7,390	*8,730	6,550	(26.3)
3.0m	kg					*7,880	6,980	*6,120	4,550	5,060	3,240	*4,060	2,700	8.39
9.8ft	lb					*17,370	15,390	*13,490	10,030	11,160	7,140	*8,950	5,950	(27.5)
1.5m	kg					*9,500	6,470	6,920	4,310	4,930	3,120	4,100	2,600	8.48
4.9ft	lb					*20,940	14,260	15,260	9,500	10,870	6,880	9,040	5,730	(27.8)
0.0m	kg			*4,930	*4,930	*10,340	6,190	6,720	4,140	4,830	3,030	4,190	2,640	8.29
0.0ft	lb			*10,870	*10,870	*22,800	13,650	14,820	9,130	10,650	6,680	9,240	5,820	(27.2)
-1.5m	kg	*5,620	*5,620	*9,400	*9,400	*10,370	6,120	6,640	4,060	4,800	3,010	4,550	2,860	7.80
-4.9ft	lb	*12,390	*12,390	*20,720	*20,720	*22,860	13,490	14,640	8,950	10,580	6,640	10,030	6,310	(25.6)
-3.0m	kg			*13,630	12,090	*9,640	6,180	6,680	4,100			5,410	3,380	6.96
-9.8ft	lb			*30,050	26,650	*21,250	13,620	14,730	9,040			11,930	7,450	(22.8)
-4.5m	kg			*10,720	*10,720	*7,730	6,400					*5,820	4,710	5.60
-14.8ft	lb			*23,630	*23,630	*17,040	14,110					*12,830	10,380	(18.4)

| 1 | Lifting capacity are based on ISO 10567.
| 2 | Lifting capacity of HX Series does not exceed 75% of tipping load with the machine on firm, level ground or 87% of full hydraulic capacity.
| 3 | The Lift-point is bucket pivot mounting pin on the arm(without bucket mass).
| 4 | (*) indicates load limited by hydraulic capacity.

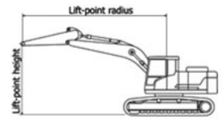

HX210S / HX220S

LIFTING CAPACITY

Rating over-front | Rating over-side or 360 degree

HX220S LONG REACH BOOM

8.5 m (27' 11") boom, 6.2 m (20' 4") arm equipped with 800 mm (32") triple grouser shoe, and 5,300 kg (11,690 lb) counterweight.

Load Point Height m (ft)		Lift-Point Radius																		At Max. Reach		
		1.5m (4.9ft)		3.0m (9.8ft)		4.5m (14.8ft)		6.0m (19.7ft)		7.5m (24.6ft)		9.0m (29.5ft)		10.5m (34.4ft)		12.0m (39.4ft)		13.5m (44.3ft)		Capacity		Reach
																						m (ft)
12.0m	kg																			*970	*970	9.79
39.4ft	lb																			*2,140	*2,140	(32.1)
10.5m	kg													*1,530	*1,530					*880	*880	11.17
34.4ft	lb													*3,370	*3,370					*1,940	*1,940	(36.6)
9.0m	kg													*2,000	*2,000	*1,090	*1,090			*830	*830	12.21
29.5ft	lb													*4,410	*4,410	*2,400	*2,400			*1,830	*1,830	(40.0)
7.5m	kg													*2,050	*2,050	*1,800	*1,800			*810	*810	12.99
24.6ft	lb													*4,520	*4,520	*3,970	*3,970			*1,790	*1,790	(42.6)
6.0m	kg													*2,170	*2,170	*2,110	1,940	*880	*880	*800	*800	13.55
19.7ft	lb													*4,780	*4,780	*4,650	4,280	*1,940	*1,940	*1,760	*1,760	(44.5)
4.5m	kg											*2,530	*2,530	*2,350	*2,350	*2,220	1,860	*1,430	*1,430	*810	*810	13.94
14.8ft	lb											*5,580	*5,580	*5,180	*5,180	*4,890	4,100	*3,150	*3,150	*1,790	*1,790	(45.7)
3.0m	kg					*5,420	*5,420	*4,030	*4,030	*3,300	*3,300	*2,850	*2,850	*2,560	2,260	*2,360	1,770	*1,770	1,400	*840	*840	14.15
9.8ft	lb					*11,950	*11,950	*8,880	*8,880	*7,280	*7,280	*6,280	*6,280	*5,640	4,980	*5,200	3,900	*3,900	3,090	*1,850	*1,850	(46.4)
1.5m	kg					*6,960	*6,960	*4,860	4,840	*3,810	3,550	*3,180	2,710	*2,780	2,120	*2,510	1,680	*1,960	1,340	*880	*880	14.20
4.9ft	lb					*15,340	*15,340	*10,710	10,670	*8,400	7,830	*7,010	5,970	*6,130	4,670	*5,530	3,700	*4,320	2,950	*1,940	*1,940	(46.6)
0.0m	kg			*2,670	*2,670	*6,320	*6,320	*5,550	4,370	*4,260	3,250	*3,490	2,510	*2,990	1,990	*2,650	1,590	*1,970	1,290	*940	*940	14.08
0.0ft	lb			*5,890	*5,890	*13,930	*13,930	*12,240	9,630	*9,390	7,170	*7,690	5,530	*6,590	4,390	*5,840	3,510	*4,340	2,840	*2,070	*2,070	(46.2)
-1.5m	kg	*2,530	*2,530	*3,460	*3,460	*6,060	6,020	*6,000	4,070	*4,600	3,030	*3,740	2,360	3,150	1,880	2,590	1,520	*1,670	1,250	*1,040	*1,040	13.81
-4.9ft	lb	*5,580	*5,580	*7,630	*7,630	*13,360	13,270	*13,230	8,970	*10,140	6,680	*8,250	5,200	6,940	4,140	5,710	3,350	*3,680	2,760	*2,290	*2,290	(45.3)
-3.0m	kg	*3,520	*3,520	*4,440	*4,440	*6,700	5,910	*6,220	3,920	*4,810	2,900	3,820	2,250	3,080	1,810	2,550	1,480			*1,170	*1,170	13.36
-9.8ft	lb	*7,760	*7,760	*9,790	*9,790	*14,770	13,030	*13,710	8,640	*10,600	6,390	8,420	4,960	6,790	3,990	5,620	3,260			*2,580	*2,580	(43.8)
-4.5m	kg	*4,540	*4,540	*5,560	*5,560	*7,810	5,920	*6,230	3,880	*4,860	2,840	3,770	2,210	3,040	1,780	2,540	1,470			*1,360	*1,360	12.71
-14.8ft	lb	*10,010	*10,010	*12,260	*12,260	*17,220	13,050	*13,730	8,550	*10,710	6,260	8,310	4,870	6,700	3,920	5,600	3,240			*3,000	*3,000	(41.7)
-6.0m	kg	*5,640	*5,640	*6,840	*6,840	*8,000	6,040	*6,020	3,920	*4,750	2,850	3,780	2,210	3,060	1,790					*1,650	1,540	11.84
-19.7ft	lb	*12,430	*12,430	*15,080	*15,080	*17,640	13,320	*13,270	8,640	*10,470	6,280	8,330	4,870	6,750	3,950					*3,640	3,400	(38.8)
-7.5m	kg	*6,860	*6,860	*8,360	*8,360	*7,280	6,240	*5,570	4,040	*4,430	2,930	*3,580	2,280	*2,850	1,880					*2,170	1,840	10.68
-24.6ft	lb	*15,120	*15,120	*18,430	*18,430	*16,050	13,760	*12,280	8,910	*9,770	6,460	*7,890	5,030	*6,280	4,140					*4,780	4,060	(35.0)
-9.0m	kg			*8,410	*8,410	*6,130	*6,130	*4,760	4,240	*3,760	3,100	*2,880	2,450							*2,800	2,410	9.13
-29.5ft	lb			*18,540	*18,540	*13,510	*13,510	*10,490	9,350	*8,290	6,830	*6,350	5,400							*6,170	5,310	(30.0)

1. Lifting capacity are based on ISO 10567.
2. Lifting capacity of the HX A Series does not exceed 75% of tipping load with the machine on firm, level ground or 87% of full hydraulic capacity.
3. The Lift-point is bucket pivot mounting pin on the arm(without bucket mass).
4. (*) indicates load limited by hydraulic capacity.

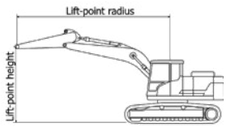

HX210S / HX220S

STANDARD / OPTION

ENGINE	STD	OPT
Hyundai 6BTAA-5.9 (HM5.9)	●	
HYDRAULIC SYSTEM		
3-power mode, 2-work mode, user mode	●	
Variable power control	●	
Engine auto idle	●	
CAB & INTERIOR		
ISO STANDARD CABIN		
Rise-up type windshield wiper	●	
Radio / USB player		●
12 volt power outlet (24V DC to 12V DC converter)	●	
Electric horn	●	
All-weather steel cab with 360° visibility	●	
Sliding fold-in front window	●	
Sliding side window(LH)	●	
Lockable door	●	
Storage compartment	●	
Sun visor	●	
Door and cab locks, one key	●	
Mechanical suspension seat	●	
Pilot-operated slidable joystick	●	
Cabin lights		●
Cabin roof-steel cover	●	
AUTOMATIC CLIMATE CONTROL		
Air conditioner & heater	●	
Defroster	●	
Starting aid (air grid heater) for cold weather	●	
CENTRALIZED MONITORING		
Engine speed or trip meter / Accel.	●	
Engine coolant temperature gauge	●	
Max power	●	
Low speed / High speed	●	
Auto idle	●	
Air cleaner clogging	●	
Indicators	●	
Fuel level gauge	●	
Hyd. oil temperature gauge	●	
Fuel warmer		●
Warnings	●	
Communication error	●	
Low battery	●	
Clock	●	
CABIN FOPS (ISO 10262) LEVEL 2		
FOPS (Falling Object Protective Structure)·ISO 10262 Level 2 — Front & Tops guard		●

SAFETY	STD	OPT
Battery master switch	●	
Two front working lights (1 boom mounted, 1 front frame mounted)	●	
Travel alarm		●
Beacon lamp		●
Automatic swing brake	●	
Boom holding system	●	
Arm holding system	●	
Two outside rearview mirror	●	
Wire net guard		●
ATTACHMENT		
BOOMS		
5.70m, 18' 8" Mono	●	
5.70m, 18' 8" Heavy Duty		●
8.50m, 27' 11" Long Reach		●
ARMS		
2.00m, 6' 7"		●
2.40m, 7' 10"		●
2.90m, 9' 6"	●	
2.90m, 9' 6" Heavy Duty		●
6.20m, 20' 4"		●
OTHERS		
Pre-Cleaner		●
Removable clean-out dust net for cooler	●	
Removable reservoir tank	●	
Fuel pre-filter	●	
Fuel warmer		●
Self-diagnostics system	●	
Hi MATE (Remote Management System)		●
Batteries (2 x 12V x 100 AH)	●	
Fuel filler pump (35 L/min)		●
Single-acting piping kit (breaker, etc.)		●
Accumulator for lowering work equipment	●	
Tool kit		●
COUNTERWEIGHT		
3.6 ton CWT	●	
4.2 ton CWT		●
5.3 ton CWT		●
UNDERCARRIAGE		
Lower frame under cover (additional)		●
Lower frame under cover (normal)	●	
TRACK SHOES		
Triple grousers shoes (600mm, 24")	●	
Triple grousers shoe (700mm, 28")		●
Triple grousers shoe (800mm, 32")		●
Track rail guard	●	

* Standard and optional equipment may vary. Contact your Hyundai dealer for more information. The machine may vary according to International standards.
* The photos may include attachments and optional equipment that are not available in your area.
* Materials and specifications are subject to change without advance notice.
* All imperial measurements rounded off to the nearest pound or inch.

MEMO